Journal of Engineering, Management and Information Technology

ASPUR PUBLISHING

Vol. 05, No. 01 (2027) 9-16, doi:10.61552/JEMIT.2027.01.002 - http://jemit.aspur.rs

ANOMALY DETECTION IN SMART GRID STABILITY USING CONVOLUTIONAL VARIATIONAL AUTOENCODER

Benjamin Essilfie-Nyame
Robert Agyare Ofosu [1]
Philip Blewushie

Received 27.07.2026.
Revised 03.09.2026.
Accepted 11.10.2026.

Keywords:

Anomaly detection, Smart grid, Unsupervised learning, Machine learning, Variational Autoencoder.

Original research





A B S T R A C T

Ensuring a continuous supply of electricity, at the expense of system failures, requires diligent maintenance of electrical grid stability. Although traditional rule-based and Machine Learning (ML) methods seem promising, they often struggle when relatively high-dimensional data is involved. Moreover, supervised Deep Learning methods are often limited by the lack of sufficient labeled anomaly samples. This study presents an unsupervised anomaly detection framework that uses a Convolutional Variational Autoencoder (CNN-VAE) to learn the distribution of normal grid operating conditions. In an experiment conducted on an electrical grid dataset, the CNN-VAE achieves better results than other unsupervised baselines, with F1-score (0.897) and AUC (0.920). These results suggest that this method can be considered for real-time electrical grid stability monitoring in smart grid systems.

© 2027 Journal of Engineering, Management and Information Technology

1. INTRODUCTION

Smart electrical grids make traditional distribution systems more reliable by adding modern communication, sensing, and control systems (Kulkarni et al., 2021; Butt et al., 2021). Although these technologies make it flexible to integrate green energy sources, they introduce additional complexities that make stability monitoring challenging for traditional methods (Shi et al., 2020). Therefore, there is a need for more robust methods that can handle the complex behaviour of smart grid systems. Anomaly detection is important for keeping smart grids running safely by identifying unusual patterns that could signal faults, cyber-attacks, or system instability (Banik et al., 2023; Khodadad et al., 2023). Traditional rule-based and ML techniques (El Chamie et al., 2018; Purushothaman, 2020) often struggle in this setting because smart grid data is relatively high-dimensional and nonlinear. Supervised deep learning models (Sundaram et al., 2024), on the other hand, rely on large quantities of labeled data, which is rarely available in practice. Consequently, this challenge has led to growing interest in unsupervised deep learning methods to identify unusual patterns in data without labeled samples. Variational Autoencoders (VAEs) can learn useful hidden representations from complex data distributions (Kingma & Welling, 2019; Shahid et al., 2024). In smart grid operations, VAEs provide a way to learn normal operating conditions to detect anomalies in the data (Guha et al., 2023; Khediri et al., 2024). However, standard VAE designs might not completely capture the spatial connections between data from various components of the grid. Therefore, the model

[1] Corresponding author: Robert Agyare Ofosu
Email: roberto8ofosu@gmail.com

architecture must be adapted to represent these spatial relationships more effectively.

This study proposes an unsupervised approach using a Convolutional Variational Autoencoder (CNN-VAE) to identify unusual changes in smart grid systems. The model uses one-dimensional convolutional layers to capture relationships among sensor signals in the data. It also learns a simpler, compressed version of this data that keeps the important patterns of normal grid behavior.

The method is tested using a simulated smart grid dataset and compared to two hybrid unsupervised deep learning baselines: LSTM-MVAE (Guha et al., 2023) and MLAE (Huynh et al., 2024). The experiments show that the CNN-VAE performs better at detecting anomalies, consistently improving the F1-score and AUC. This paper makes the following key contributions: Design of a CNN-based VAE that can detect unusual changes in smart grid stability, and Development of a robust framework that can monitor grid stability in real-time without requiring labeled examples.

2. LITERATURE REVIEW

Recent progress in deep learning has improved traditional supervised methods by automatically learning important features directly from high-dimensional grid data. Recurrent (Massaoudi et al., 2021; Sundaram et al., 2024) and convolutional (Salam & El Hibaoui, 2021) architectures have been widely applied to grid forecasting and operational prediction tasks. Hybrid approaches combining deep learning with classical ML methods (Aliyeva & Abdullayev, 2024; Lakshmanarao et al., 2024) have further extended these capabilities to decentralized settings and renewable-energy-integrated grids. These methods work well when trained on balanced and complete datasets, but cannot be applied in real-life situations where unusual events are rare and labeled data is limited.

Unsupervised deep learning methods have become popular as an effective alternative (Sundaravelrani et al., 2024; Zhang et al., 2021). Among these approaches, sequence-based architectures (Sun et al., 2022) have been widely used to model temporal dependencies in grid operations and learn normal system behaviour directly from historical data. Autoencoder-based methods (Yang et al., 2020) have also emerged as a prominent class of techniques for monitoring the stability of voltage in real-time. However, traditional autoencoders lack a probabilistic interpretation and may fail to capture complex data distributions. In response, several improved versions of autoencoders (Huynh et al., 2024) have been developed to effectively detect anomalies in power grid systems.

VAEs improve on autoencoders by using a probabilistic approach to learn the underlying distribution of the data, making them more effective at representing complex system behaviour (Angiulli et al., 2020; Kingma & Welling, 2019; Yao et al., 2019). VAE-based approaches (Guha et al., 2023; Khediri et al., 2024) have since been applied across a range of grid monitoring tasks. Despite these advances, existing VAE-based grid monitoring approaches often neglect the spatial relationships embedded in multivariate time-series sensor readings.

Convolutional layers, commonly employed in computer vision (Aishwarya & Minu, 2021; Raj & Kos, 2025; Zhao et al., 2024) and speech processing (Gambhir et al., 2024; Wahab et al., 2024), offer a means of extracting local spatial patterns from structured data. CNNs have also shown promise in supervised smart grid stability prediction applications (Hosen et al., 2024). Moreover, when combined with VAEs, convolutional architectures can enhance feature extraction and improve the quality of learned representations (Nellas et al., 2021; Prifti et al., 2023; Wang et al., 2024). Recent studies have investigated combining CNNs and VAEs to analyze time series data more effectively (Gonzalez et al., 2024; Liu et al., 2023; Xie et al., 2023). However, VAEs combined with CNNs is unexplored for smart grid stability.

This study, therefore, evaluates the capability of an integrated CNN-VAE model for unsupervised anomaly detection in smart grid stability.

3. METHODOLOGY

As discussed in Section 1, the study uses the Smart Grid dataset, which includes data from a 4-node smart grid system (Arzamasov, 2018). Figure 1 shows the basic design of the 4-node star system, which uses the idea of Decentralized Smart Grid Control. In this setup, the electricity producer is at the center, and the other nodes around it, are the connected units in the grid. The star configuration shows how the producer plays a key role in keeping the system balanced, while also allowing the grid to use decentralized control methods that help improve overall stability.

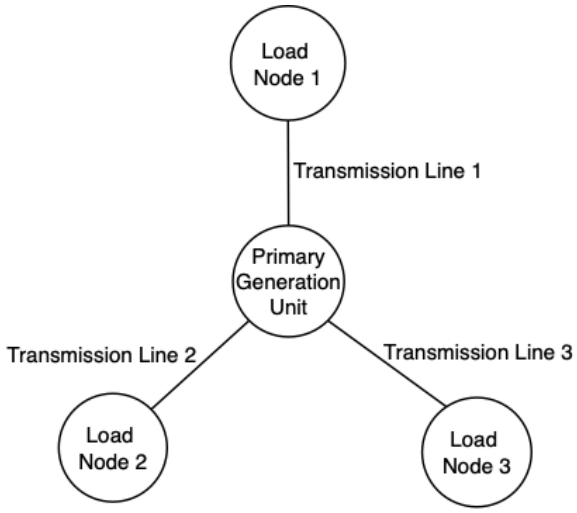

Figure 1. 4-node Smart Grid System

The dataset comprises 10,000 instances distributed across 14 features. It consists of 11 predictive features, two target features, and one non-predictive derived feature ($p1$), capturing both the physical and economic

dynamics of a four-participant power grid. The predictive features are continuous measures including reaction times ($tau1 - tau4$), nominal power outputs and consumptions ($p2 - p4$) and price elasticity coefficients ($g1 - g4$). System stability is represented by two target fields: $stab$, a continuous measure indicating linear stability through the real part of a characteristic equation root, and $stabf$, a two-class label designating the system as either stable or unstable.

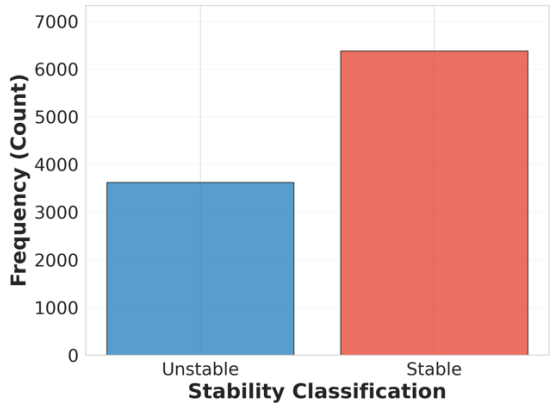

Figure 2. Distribution of Grid System Stability Classifications

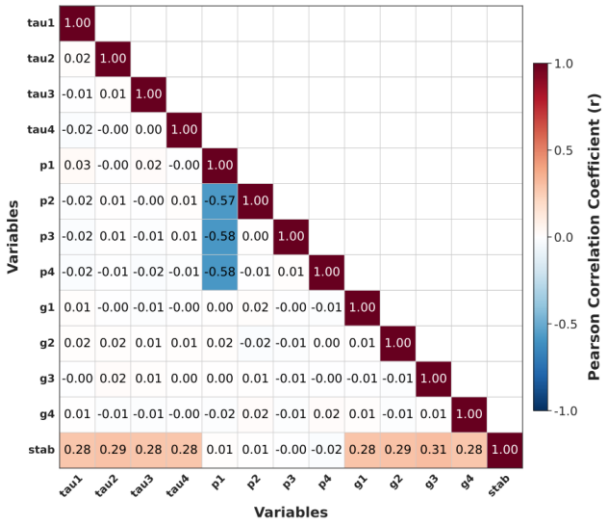

Figure 3. Correlation Matrix of System Variables (Lower Triangle Representation)

The dataset's stability distribution, presented in Figure 2, is uneven, with more stable cases than unstable ones. Figure 3 shows a correlation matrix that illustrates how the grid parameters are related to each other. It highlights how $p1$ has strong negative correlations with the other p variables (e.g., the correlation between $p1$ and $p2$ is -0.573), confirming it is dependent and not useful for prediction.

3.1 Proposed Model Architecture

The proposed CNN-VAE has three main parts: an encoder network, a latent representation, and a decoder network. Figure 4 shows the layout of this CNN-VAE model.

Encoder Network

The encoder part of the VAE takes the input and converts it into a simpler, probabilistic space. It uses convolutional layers to learn spatial patterns from the input data. The convolutional layers preserve the spatial structure of the input data while gradually reducing its size. The processed data then goes through two separate fully connected layers that produce the mean values, $\boldsymbol{\mu}$, and the log of the variance, $\mathbf{log}\,\boldsymbol{\sigma^2}$, that describe the latent distribution, $\boldsymbol{z}$.

Latent Space Representation

Directly sampling μ and $\log \sigma^2$ would block the flow of gradients during back propagation. To address this, the reparameterization trick is used to draw samples from a standard normal distribution and change them using the learned parameters.

More formally, rather than sampling the latent variable directly, $z \sim N(\mu, \sigma^2 I)$, it is constructed deterministically as:

$$z = \mu + \epsilon \odot \sigma^2 \quad (1)$$

where $\sigma = exp(0.5 \cdot log\, \sigma^2)$ is the standard deviation vector, ϵ is a random noise vector sampled from a standard normal distribution $N(0, I)$, and $\odot$ is the element-wise multiplication (Milano et al., 2024). This method handles the random part (ϵ) separately from the parameters the model learns(μ, σ), allowing gradients to be propagated during backpropagation.

Decoder Network

The decoder takes the compressed data and gradually expands it through several layers until it matches the dimensions of the original input. Its goal is to create a version $\acute{x}$ that is very similar to the original input x.

Loss Function

The loss function is given by the Evidence Lower Bound (ELBO):

$$\mathcal{L} = \mathbb{E}_{q(z|x)}[\log p\,(x|z)] - \beta \cdot D_{KL}\big(q(z|x)\|p(z)\big) \quad (2)$$

It comprises two components: the Reconstruction Loss and the regularization term, Kullback-Leibler (KL) Divergence. The Reconstruction Loss measures how well the decoder can recreate the original input x from the encoded information z, which is the same as to maximizing the expected log-likelihood of the data, $\log p\,(x|z)$.

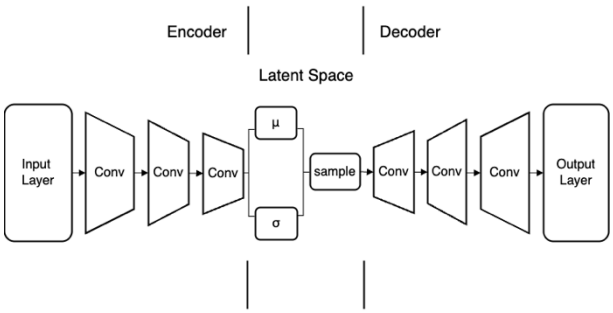

Figure 4. Proposed Model Architecture

3.2 Experiment

This study focuses on distinguishing stable operating states from unstable operating states at the system level, where unstable operating states are treated as anomalies. The objective is therefore to detect anomalous grid operating conditions associated with instability. The model is trained only on stable samples but tested on both stable and unstable samples. The data was split into 80% train, 10% validation, and 10% test sets, keeping the same balance of classes as in the original dataset. The numerical features were adjusted so their values were centered around zero and spread evenly.

The model was set up with the following settings: a β-regularization value of 0.001, a learning rate of 1×10^{-4}, weight decay also at 1×10^{-4} , and a batch size of 256. The model's parameters were optimized using the Adam (Adaptive Moment Estimation) optimizer. Figure 5 shows an overview of the proposed approach. As illustrated in Figure 4, the main part of the process is the CNN-VAE model, which has an encoder that extracts latent features and a decoder that learns to reconstruct the data. The model is evaluated using reconstruction loss as discussed in Section 3.1.

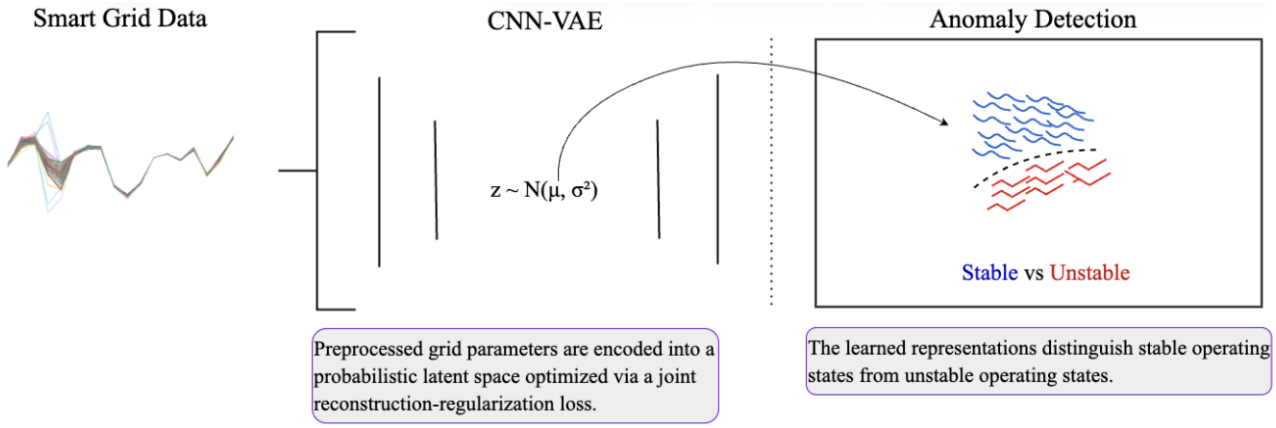

Figure 5. Anomaly Detection in Smart Grid Stability using CNN-VAE

3.3 Model Evaluation

The learned features from the encoder output are evaluated on an anomaly detection task using three different classifiers: KNN, Random Forest, and SVM. It is worth noting that, although all compared models are trained and evaluated in a fully unsupervised manner, a standardized classification layer is applied to allow a fair comparison of the quality of each model's learned representations. Because the dataset has uneven class sizes, precision, recall, F1-score, and Receiver Operating Characteristic curve (ROC-AUC) are used to fairly evaluate the model's performance.

Precision and Recall

These metrics measure how well the model works on the less frequent class. Precision shows how often the model's positive predictions are correct by showing the percentage of predicted positives that are actually positive. Recall shows how good the model is at finding all the real positive cases. It is the percentage of true positive results out of all the actual positive instances. Precision and recall are formally represented in (3) and (4), where TP represents True Positives. FP represents False Positives, and FN represents False Negatives.

$$Precision = \frac{TP}{TP + FP} \quad (3)$$

$$Recall = \frac{TP}{TP + FN} \quad (4)$$

F1-score

The F1-score is the harmonic mean of both precision and recall. It gives a fair overall measure of how well a model performs, particularly in cases of class imbalance. Equation (5) formally defines the F1-score.

$$F1 - score = \frac{2 \times Precision \times Recall}{Precision + Recall} \quad (5)$$

ROC-AUC

ROC-AUC is an effective metric for assessing binary classification models, especially with imbalanced datasets. It quantifies how well the model differentiates between classes across a range of classification thresholds.

4. RESULTS AND DISCUSSION

CNN-VAE is compared with two state-of-the-art unsupervised models, LSTM-MVAE and MLAE, which are used to detect anomalies in power grid systems. Table 1, Figure 6 (a-c) and Figure 7 clearly show how each model performed across all classifiers.

4.1 Multi-Metric Performance Analysis

The comparison shows that the proposed CNN-VAE performs better than both LSTM-MVAE and MLAE when used with SVM and Random Forest classifiers. Specifically:

- The proposed CNN-VAE model recorded the highest F1-Score of 0.8973 and AUC of 0.9543 with the SVM classifier. It also recorded the highest Recall (0.9531) with the Random Forest classifier.
- The MLAE model showed competitive performance, with its best F1-Score of 0. 8848 (Random Forest) and AUC of 0. 9238 (Random Forest).
- The LSTM-MVAE model worked but usually recorded lower F1-Scores and AUC values than MLAE and the CNN-VAE model. Its AUC values were much lower (between 0.67 and 0.84), and its precision was reduced across different classifiers.

These results show that CNN-VAE learns patterns that make it easier to identify stable and unstable grid operating conditions.

Similarly, in Fig. 6, the radar profiles for the CNN-VAE are notably broader and more uniformly elevated than those for MLAE and LSTM-MVAE, signifying better trade-offs between sensitivity and precision. This characteristic is important for anomaly detection in power grids, where both missed anomalies and false alarms can affect system operations. The heatmap in Fig. 7 also reinforces this finding by visually demonstrating that the CNN-VAE sustains its performance lead across multiple metrics simultaneously. The relatively uniform high-intensity regions associated with CNN-VAE suggest that its latent representations remain effective regardless of the classification method used.

Table 1. Results of each Model across Classifiers

	Precision	Recall	F1-Score	AUC
KNN				
LSTM-MVAE (Guha et al., 2023)	0.7233	0.8984	0.8014	0.6709
MLAE (Huynh et al., 2024)	**0.8000**	**0.9375**	**0.8633**	**0.8678**
CNN-VAE	0.7905	0.9141	0.8478	0.8477
Random Forest				
LSTM-MVAE (Guha et al., 2023)	0.7580	0.9297	0.8351	0.8053
MLAE (Huynh et al., 2024)	**0.8440**	0.9297	0.8848	0.9238
CNN-VAE	0.8414	**0.9531**	**0.8938**	**0.9525**
SVM				
LSTM-MVAE (Guha et al., 2023)	0.7677	**0.9297**	0.8410	0.8420
MLAE (Huynh et al., 2024)	0.8322	**0.9297**	0.8782	0.9158
CNN-VAE	**0.8741**	0.9219	**0.8973**	**0.9543**

[a] Note: The bold values indicate the best values per classifier metric (Precision, Recall, F1-score, AUC). The optimal value approaches unity. Overall best highlighted in blue.

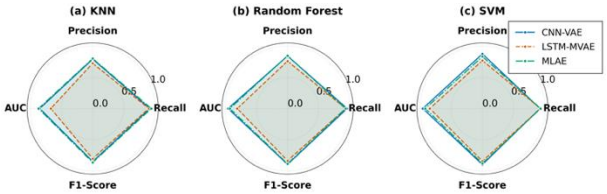

Figure 6. Performance Radar Charts across Models

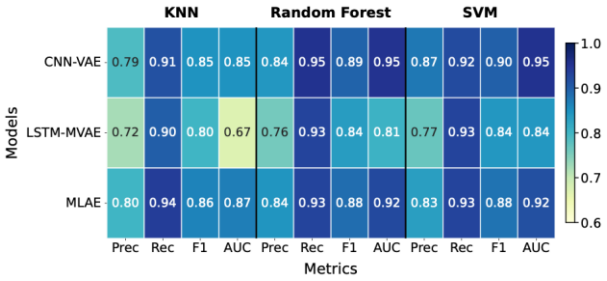

Figure 7. Performance Metrics Heatmap across Models

4.2 Analysis of Discriminative Power and Robustness

The ROC curve analysis in Figure 8 (a-c) provides evidence of the discriminative power of each model. The CNN-VAE model consistently records the highest AUC across SVM and Random Forest. It reaches an AUC of 0.954 with SVM and 0.952 with Random Forest. The MLAE model recorded competitive AUCs of 0.924 for Random Forest and 0.916 for SVM, although its performance consistently trails that of the CNN-VAE. Conversely, the LSTM-MVAE model underperforms relative to both CNN-VAE and MLAE across all classifiers, with AUCs of 0.842 (SVM), 0.805 (Random Forest), and 0.671 (KNN). The ROC curves further show that the CNN-VAE performs the best, as its curve stays closest to the top-left corner. This implies it can correctly detect most positives while keeping the number of false alarms low. Such performance is especially valuable in systems that require cautious and reliable operation.

4.3 Error Distribution and Class Separability Analysis

The confusion matrices presented in Figure 9 (a-i) align with the ROC findings and provide insights into the classification error distribution of each model. The matrices for CNN-VAE–based classifiers show that they identify the unstable cases more evenly, without causing a noticeable increase in false positives. This implies that the CNN-VAE helps to clearly separate different classes, rather than merely shifting the classification threshold. In contrast, the LSTM-MVAE shows lower recall and more

misclassifications, suggesting that its latent features are not good enough to clearly separate the classes. The MLAE often performs closer to the CNN-VAE, showing it has learned useful features effectively. However, it still does not match the overall performance of the CNN-VAE.

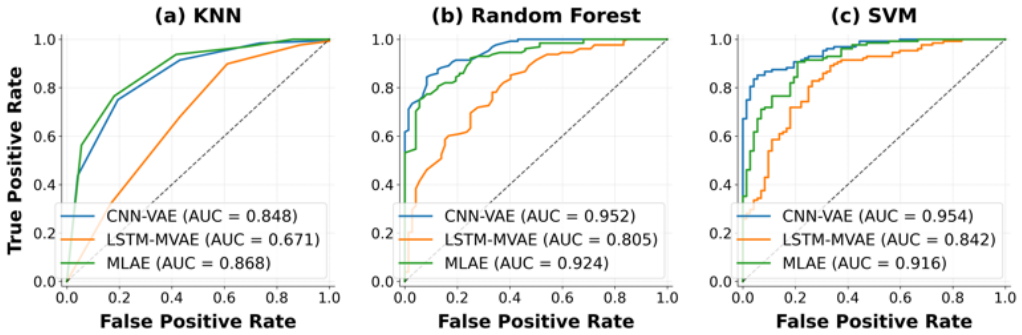

Figure 8. ROC Curves Comparison across Models

A notable observation is that CNN-VAE reduces false negatives effectively. In practical power grid monitoring applications, false negatives are particularly undesirable because they correspond to unstable operating conditions that remain undetected. Consequently, the ability of CNN-VAE to reduce such errors helps ensure reliable grid operation.

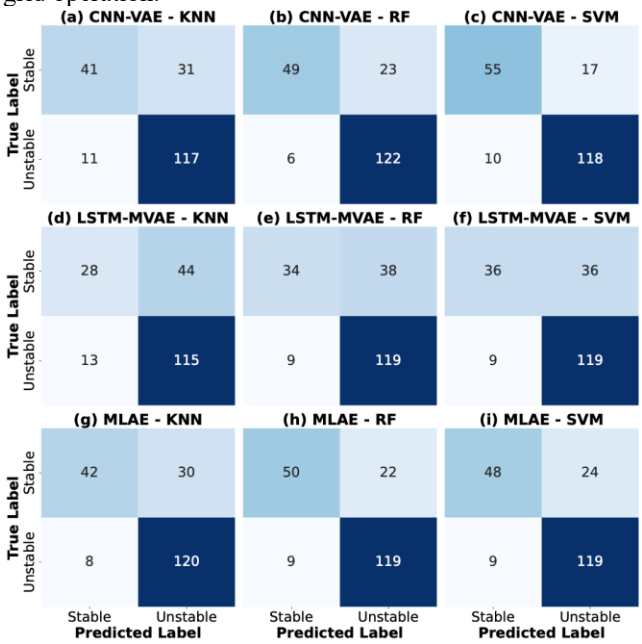

Figure 9. Confusion Matrices Comparison across Models

4.4 Discussion

The experimental results demonstrate that CNN-VAE learns more informative latent representations of smart grid operating conditions than either baseline model. This is clear from its consistent performance across the different classifiers. Collectively, these results show that the CNN-VAE learns latent features that capture the important spatial and structural patterns in the data.

The performance can be attributed to the complementary strengths of its two principal components. Smart grid data comprises multiple simultaneous time series measurements, and convolutional operations can efficiently identify meaningful patterns and dependencies across multiple sensor signals. The VAE component learns a compact representation of normal system behaviour from the data. Together, these two mechanisms produce a latent space that is both compact and discriminative. The model learns latent variables that preserve the underlying structure of stable operating conditions rather than relying solely on reconstruction accuracy.

In summary, the results imply that the CNN-VAE model can accurately detect unusual events in smart grid systems. It can learn what normal grid behavior looks like and then flag anything that doesn't fit this pattern. A major advantage of this approach is that it learns without labeled anomaly data. Such data is often rare and hard to get or annotate correctly in real-world situations.

5. CONCLUSION

This study addresses the challenge of anomaly detection in smart grid systems under the practical constraint of limited labeled data. To overcome this limitation, an unsupervised anomaly detection framework, CNN-VAE, is proposed. The framework learns normal grid operating behaviour directly from historical sensor data, eliminating the need for labeled anomaly examples during training.

The proposed CNN-VAE framework learns the underlying patterns of smart grid operations by integrating convolutional feature extraction with representation learning. The convolutional component extracts meaningful relationships among sensor readings, while the variational component learns a compact probabilistic representation of normal system behaviour. This architecture gives CNN-VAE an advantage over existing baseline methods.

Practitioners can take advantage of this framework to effectively detect anomalies in smart grid systems. The framework can be deployed in new grid installations where historical fault records are limited. It can detect

previously unseen anomaly types without requiring prior fault knowledge. Furthermore, as power systems evolve through renewable energy integration, changing loads, and network updates, the model can be retrained using updated stable operational data without requiring new labeled examples.

Acknowledgement:

The authors appreciate the University of Mines and Technology and the University of Ghana for making available the necessary resources for the completion of this research work.

References:

Aishwarya, D., & Minu, R. I. (2021). Convolutional neural network in computer vision. In *Applied Learning Algorithms for Intelligent IoT* (pp. 1-32). Auerbach Publications.

Aliyeva, L., & Abdullayev, N. (2024, March). Hybrid deep learning approach towards smart grid stability prediction. In *2024 IEEE 8th Energy Conference (ENERGYCON)* (pp. 1-5). IEEE.

Angiulli, F., Fassetti, F., & Ferragina, L. (2020). Improving deep unsupervised anomaly detection by exploiting VAE latent space distribution. *Lecture Notes in Computer Science (including subseries Lecture Notes in Artificial Intelligence and Lecture Notes in Bioinformatics), 12323 LNAI*, 596–611. DOI: 10.1007/978-3-030-61527-7_39

Arzamasov, V. (2018). *Electrical grid stability simulated data*. UCI Machine Learning Repository. DOI: 10.24432/C5PG66

Banik, S., Saha, S. K., Banik, T., & Hossain, S. M. (2023, June). Anomaly detection techniques in smart grid systems: A review. In *2023 IEEE World AI IoT Congress (AIIoT)* (pp. 0331-0337). IEEE. DOI: 10.48550/arXiv.2306.02473

Butt, O. M., Zulqarnain, M., & Butt, T. M. (2021). Recent advancement in smart grid technology: Future prospects in the electrical power network. *Ain Shams Engineering Journal, 12*(1), 687–695. DOI: 10.1016/J.ASEJ.2020.05.004

El Chamie, M., Lore, K. G., Shila, D. M., & Surana, A. (2018, May). Physics-based features for anomaly detection in power grids with micro-pmus. In *2018 IEEE International Conference on Communications (ICC)* (pp. 1-7). IEEE.

Gambhir, P., Dev, A., Bansal, P., & Sharma, D. K. (2024). End-to-end multi-modal low-resourced speech keywords recognition using sequential Conv2D nets. *ACM Transactions on Asian and Low-Resource Language Information Processing*, *23*(1), 1-21.

Gonzalez, G. G., Tagliafico, S. M., Fernandez, A., Sena, G. G., Acuna, J., & Casas, P. (2023). One model to find them all deep learning for multivariate time-series anomaly detection in mobile network data. *IEEE Transactions on Network and Service Management*, *21*(2), 1601-1616.

Guha, D., Chatterjee, R., & Sikdar, B. (2023). Anomaly detection using LSTM-based variational autoencoder in unsupervised data in power grid. *IEEE Systems Journal*, *17*(3), 4313-4323.

Hosen, M. S., Zhang, H., Silmee, S. M., & Shamim, M. M. H. (2024, August). A Deep Learning Approach for Prediction of Smart Grid Stability. In *2024 10th International Conference on Electrical Energy Systems (ICEES)* (pp. 1-6). IEEE.

Huynh, P. K., Singh, G., Yadav, O. P., Le, T. Q., & Le, C. (2024, January). Unsupervised anomaly detection in electric power networks using multi-layer auto-encoders. In *2024 Annual Reliability and Maintainability Symposium (RAMS)* (pp. 1-6). IEEE.

Khediri, A., Yahiaoui, A., Laouar, M. R., Bendjenna, H., & Achouri, M. (2024). VAAD: A VAE based anomaly detection approach for smart grids. *Lecture Notes in Networks and Systems, 982*, 136–143. DOI: 10.1007/978-3-031-60594-9_15

Khodadad, D., Mohammadi, Y., Paltsev, A., Cooper, A., Bretas, A., & Meyn, S. (2023). Anomaly detection in power system state estimation: Review and new directions. *Energies, 16*(18), 6678. DOI: 10.3390/EN16186678

Kingma, D. P., & Welling, M. (2019). An introduction to variational autoencoders. *Foundations and Trends® in Machine Learning, 12*(4), 307–392. DOI: 10.1561/2200000056

Kulkarni, V., Sahoo, S. K., Thanikanti, S. B., Velpula, S., & Rathod, D. I. (2021). Power systems automation, communication, and information technologies for smart grid: A technical aspects review. *TELKOMNIKA (Telecommunication Computing Electronics and Control), 19*(3), 1017–1029. DOI: 10.12928/TELKOMNIKA.V19I3.16428

Lakshmanarao, A., Srisaila, A., Kiran, T. S. R., Kumar, K. V., & Koppireddy, C. S. (2024). An efficient smart grid stability prediction system based on machine learning and deep learning fusion model. *Indonesian Journal of Electrical Engineering and Computer Science*, *33*(2), 1293-1301.

Liu, S., Zhou, N., Bai, Z., & Wu, Y. (2023, December). The study on multivariate time series anomaly detection via convolutional variational autoencoder. In *2023 IEEE 6th International Conference on Automation, Electronics and Electrical Engineering (AUTEEE)* (pp. 605-610). IEEE.

Massaoudi, M., Abu-Rub, H., Refaat, S. S., Chihi, I., & Oueslati, F. S. (2021, April). Accurate smart-grid stability forecasting based on deep learning: Point and interval estimation method. In *2021 IEEE Kansas Power and Energy Conference (KPEC)* (pp. 1-6). IEEE.

Milano, N., Casella, M., Esposito, R., & Marocco, D. (2024). Exploring the potential of variational autoencoders for modeling nonlinear relationships in psychological data. *Behavioral Sciences, 14*(7), 527. DOI: 10.3390/BS14070527

Nellas, I. A., Tasoulis, S. K., & Plagianakos, V. P. (2021, December). Convolutional variational autoencoders for image clustering. In *2021 International Conference on Data Mining Workshops (ICDMW)* (pp. 695-702). IEEE.

Prifti, E., Buban, J. P., Thind, A. S., & Klie, R. F. (2023). Variational convolutional autoencoders for anomaly detection in scanning transmission electron microscopy. *Small*, *19*(16), 2205977.

Purushothaman, S. (2020, August). Physics-based early detection algorithm for temperature monitoring systems in electrical equipment. In *2020 IEEE Power & Energy Society General Meeting (PESGM)* (pp. 1-5). IEEE.

Raj, R., & Kos, A. (2025). An extensive study of convolutional neural networks: Applications in computer vision for improved robotics perceptions. *Sensors, 25*(4), 1033. DOI: 10.3390/S25041033

Salam, A., & El Hibaoui, A. (2021, November). Applying deep learning model to predict smart grid stability. In *2021 9th International Renewable and Sustainable Energy Conference (IRSEC)* (pp. 1-9). IEEE.

Shahid, Z. K., Saguna, S., & Åhlund, C. (2024). Variational autoencoders for anomaly detection and transfer knowledge in electricity and district heating consumption. *IEEE Transactions on Industry Applications*, *60*(5), 7437-7450.

Shi, Z., Yao, W., Li, Z., Zeng, L., Zhao, Y., Zhang, R., ... & Wen, J. (2020). Artificial intelligence techniques for stability analysis and control in smart grids: Methodologies, applications, challenges and future directions. *Applied Energy*, *278*, 115733.DOI: 10.1016/J.APENERGY.2020.115733

Sun, X., Wu, D., Zinflou, A., & Boulet, B. (2022, December). Power system anomaly detection via ensemble of encoder and decoder networks. In *2022 IEEE Electrical Power and Energy Conference (EPEC)* (pp. 116-122). IEEE.

Sundaram, K., Akash, S., Dhanush, S., Dheenadayalan, R. S., & Jagannathan, N. (2024, May). A deep learning approach to smart grid stability prediction with LSTM network. In *2024 2nd International Conference on Advancement in Computation & Computer Technologies (InCACCT)* (pp. 265-270). IEEE.

Sundaravelrani, K., Palle, K., Mallala, B., Nithya, G., & Rao, N. K. K. (2024, December). Anomaly detection in power distribution networks with unsupervised learning algorithms. In *2024 International Conference on Innovative Computing, Intelligent Communication and Smart Electrical Systems (ICSES)* (pp. 1-6). IEEE.

Wahab, F. E., Ye, Z., Saleem, N., Ali, H., & Ali, I. (2024). Efficient gated convolutional recurrent neural networks for real-time speech enhancement. *International Journal of Interactive Multimedia and Artificial Intelligence, 9*(1), 66–74. DOI: 10.9781/IJIMAI.2023.05.007

Wang, Y., Li, D., Li, L., Sun, R., & Wang, S. (2024). A novel deep learning framework for rolling bearing fault diagnosis enhancement using VAE-augmented CNN model. *Heliyon, 10*(15). DOI: 10.1016/j.heliyon.2024.e35407

Xie, T., Xu, Q., & Jiang, C. (2023). Anomaly detection for multivariate times series through the multi-scale convolutional recurrent variational autoencoder. *Expert Systems with Applications, 231*, 120725. DOI: 10.1016/J.ESWA.2023.120725

Yang, H., Qiu, R. C., & Tong, H. (2020). Reconstruction residuals based long-term voltage stability assessment using autoencoders. *Journal of Modern Power Systems and Clean Energy*, *8*(6), 1092-1103.

Yao, R., Liu, C., Zhang, L., & Peng, P. (2019, June). Unsupervised anomaly detection using variational auto-encoder based feature extraction. In *2019 IEEE International Conference on Prognostics and Health Management (ICPHM)* (pp. 1-7). IEEE.

Zhang, J. E., Wu, D., & Boulet, B. (2021, October). Time series anomaly detection for smart grids: A survey. In *2021 IEEE electrical power and energy conference (EPEC)* (pp. 125-130). IEEE

Zhao, X., Wang, L., Zhang, Y., Han, X., Deveci, M., & Parmar, M. (2024). A review of convolutional neural networks in computer vision: X. Zhao et al. *Artificial Intelligence Review*, *57*(4), 99. DOI: 10.1007/s10462-024-10721-6

Benjamin Essilfie-Nyame
Department of Computer Science,
University of Ghana.
Ghana.
bessilfie-nyame@st.ug.edu.gh
ORCID: 0009-0007-8627-1520

Robert Agyare Ofosu
Department of Electrical and Electronic Engineering,
University of Mines and Technology.
Ghana.

Philip Blewushie
Department of Electrical and Electronic Engineering,
University of Mines and Technology.
Ghana.